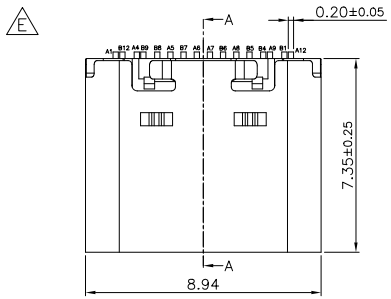

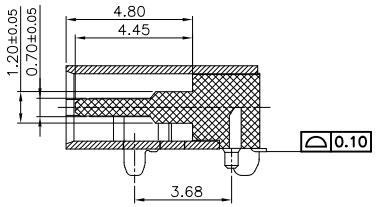

SECTION A–A

PIN	SIGNAL NAME	PIN	SIGNAL NAME
A1	GND	B12	GND
A4	VBUS	B9	VBUS
A5	CC1	B8	SBU2
A6	DP1	B7	DN2
A7	DN1	B6	DP2
A8	SBU1	B5	CC2
A9	VBUS	B4	VBUS
A12	GND	B1	GND

F Specifications:
Current Rating: 5.0A AC/DC
Voltage Rating: 20.0V AC/DC
Insulation Resistance: 100M ohm. min.
Withstanding Voltage: 100V AC For One Minute
Operating Temperature Range:−30°C ~ +80°C

Material and Finish:
Insulator: High Temperature Plastic (UL94V−0)
Insulator Color: Black
Terminal: Copper Steel
Plating: Ni 50u" Min., Au 3u"
Shell: Stainless Steel
Plating: Ni 30u" Min.
Mid Plate: Stainless Steel

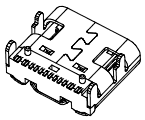

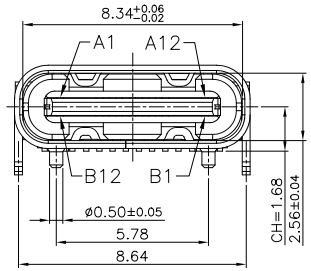

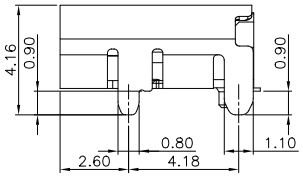

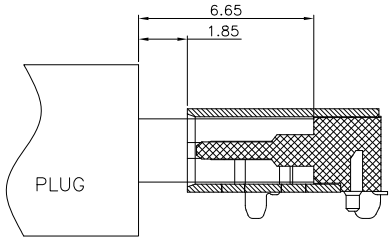

How to order
5077CR−16−SMC2−BK−TR
- Tape&Reel
- BK:Black
- No. of Contacts
- C Type R/A

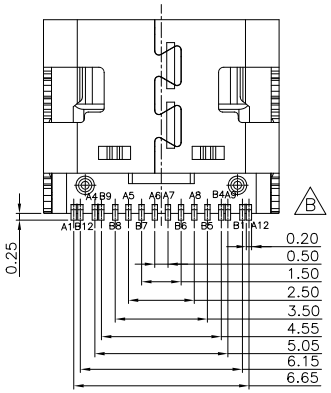

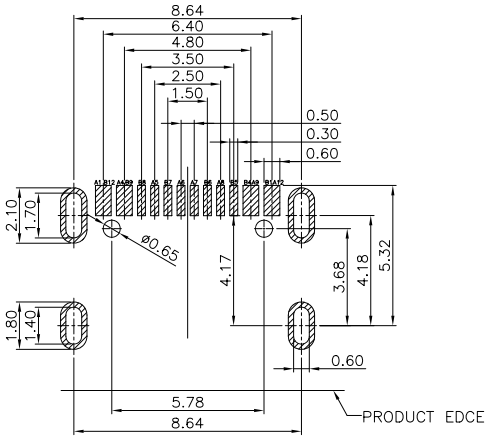

PCB Layout

active

RoHS Compliant

REV	DATE	FILE	BY
F	16−SEP−2024	F	Brian Hsu
E	03−MAY−2023	E	Jamie
D	24−FED−2022	Voltage Rating D	Selin
C	01−Apr−2021	Modify Packing Q'TY	Lisy
B	21−Jun−2019	modify pin No.	Jamie Wang
A	29−Jun−2018		Livia

DRAWN: Livia Yu
CHECKED: Jerry Chen
APPROVAL: Mike Wu

GENERAL TOLERANCE:
X.=±0.30
.X=±0.20
.XX=±0.10

UNIT: MM
SCALE:
SHEET: 1 / 2
PROJECTION:

Neltron Connectors **Neltron Industrial Co., Ltd.**

DESCRIPTION: USB C Type Female With Peg

PART NO: 5077CR−16−SMC2−BK−TR

SIZE **A4**

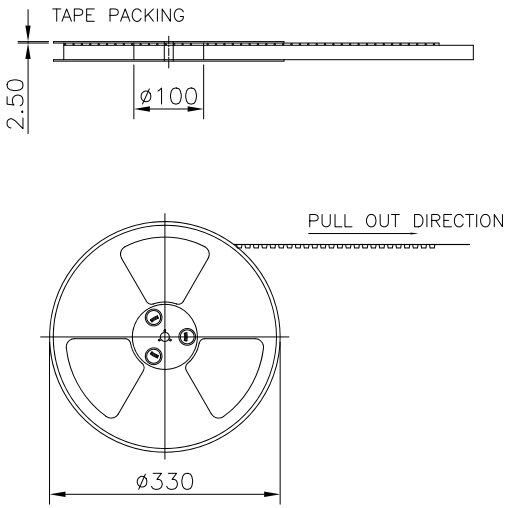

Note:
1.Material:WH Conductive Polystyrene Alloy 100% recyclable.
2.Component load per 13" reel :800pcs.
C 3.Carton Size:350*350*296(mm)

F

Pin	W	F	Pcs/Reel	Q'ty
16	24	11.5	800	8000

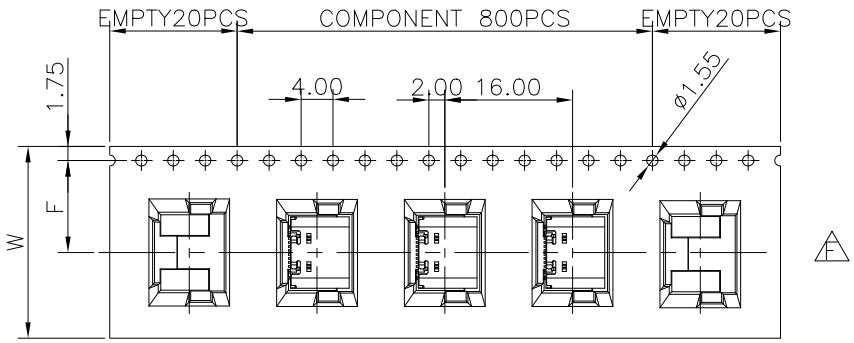

For Reel width (dimension W)24mm Single row hole

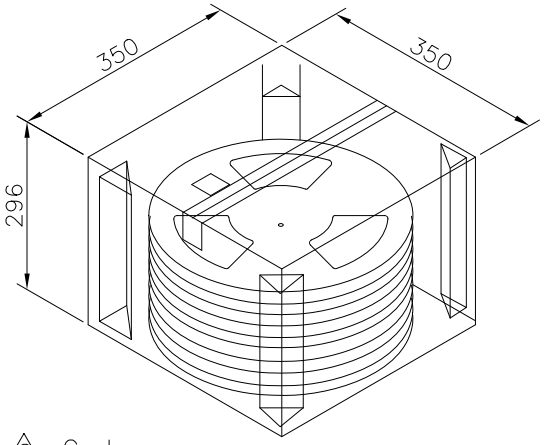

C Carton

RoHS Compliant

REV	DATE	FILE	BY
F	16-SEP-2024	F	Brian Hsu
E	03-MAY-2023	E	Jamie
D	24-FED-2022	Voltage Rating D	Selin
C	01-Apr-2021	Modify Packing Q'TY	Lisy
B	21-Jun-2019	modify pin No.	Jamie Wang
A	29-Jun-2018		Livia

DRAWN: Livia Yu
CHECKED: Jerry Chen
APPROVAL: Mike Wu

GENERAL TOLERANCE:
X.=±0.30
.X=±0.20
.XX=±0.10

UNIT: MM
SCALE:
SHEET: 2 / 2
PROJECTION:

Neltron Connectors **Neltron Industrial Co., Ltd.**

DESCRIPTION: USB C Type Female With Peg Packing List

PART NO: 5077CR-16-SMC2-BK-TR

SIZE **A4**