Transfer or duplication of this document as well as the utilization or communication of its contents are prohibited unless explicit authorization is granted. Violations will be liable for compensation. All rights reserved for patent, utility model or designs registrations. 除非经予明确授权，否则禁止转让、复制、利用、交流本文件的内容。侵犯者负赔偿责任。本公司保留对涉及发明、实用新型和外观专利的所有权利。

active

尺寸公差(mm)					
0 ~ 30	>30 ~ 60	>60 ~ 100	>100 ~ 150	>150	0.05/10
±0.20	±0.30	±0.50	±0.70	±1.00	∠ ±1°

技术要求/Technical requirements:	
颜色/Color	Black,Orange,Red
锁紧方式/Locking method	卡扣(Buckle)
接线方式/Terminal	Crimp
外壳材料/Housing materrial	PA+GF
接触件材料/Connector materrial	铜合金(Copper alloy)
插入力/Insertion force	100N Max
拔出力/Withdrawal force	>10N
插拔次数/Mechanical working life(mating cycles)	100
接线规格/Wiring specifications	2AWG or 35mm²
线径OD(Wire diameter)	11~12.5mm
建议剥线长度/Suggested stipping length	13~14mm
额定电压/Rated voltage	1500V DC
额定电流/Rated current	150A
绝缘电阻/Insulate resistance	≥5000MΩ(drying)
耐电压/Withstanding voltage	6800V/min
接触电阻/Contact resistance	≤0.5mΩ
过电压等级/Overvoltage category	III
污染等级/Pollution degree	3
防护等级/Ingress protection	IP67(Mated)
使用温度范围/Operating temperature(° C)	-40~+125(incluing temperature rise)
盐雾/Salt spray	48H
储存温度/Storage temperature(° C)	-40~+85
阻燃等级/Flame retardant ability	UL94-V0
符合RoHS环保要求/Conform to RoHS	Yes
UL4128认证/UL4128 certification	E526028
TUV认证/TUV certification	50581738

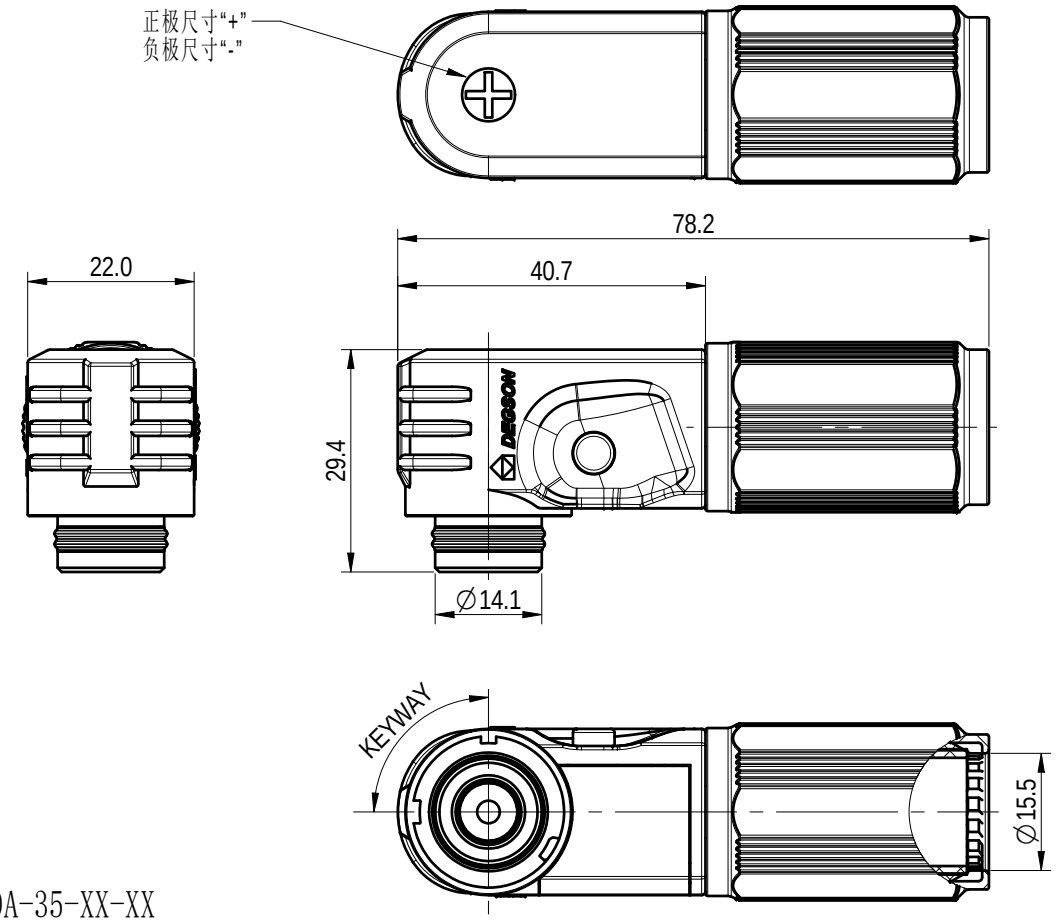

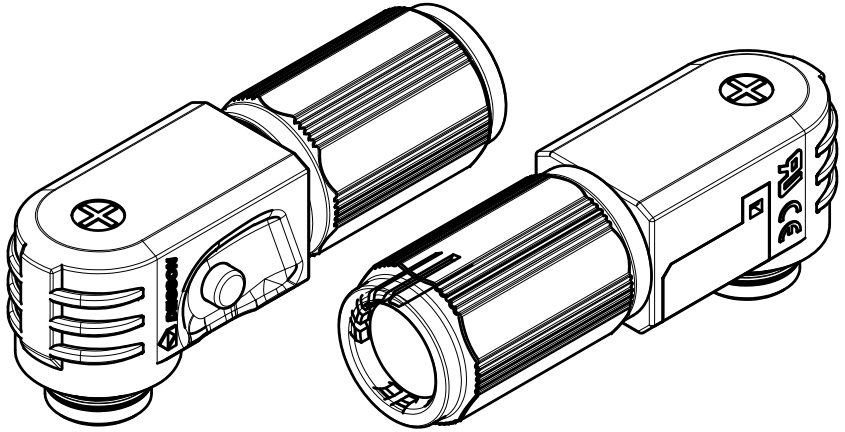

ESP-150A-35-XX-XX

Keyway: 90:90° 正极
18:180° 负极

Color: BK:Black 负极
OR:Orange 正极
RD:Red 正极

REV	ECN	DESCRIPTION	DRFT	DATE
01				

APPD:	刘剑	2024.01.24
CHKD:	于进海	2024.01.21
DRFT:	张晓瑶	2024.01.17

A4 mm (inch)

MATERIAL:	SURFACE/COLOR:
MAT NO./REV: /	MAT STATUS:

NAME: ESP-150A-35-XX-XX

DRAWING NO.	TYPE	DRAWING STATUS	SCALE	SHEET
200268691	CUSTOMER DRAWING		2:1	1/1