PTR HARTMANN
A Phoenix Mecano Company

active

Highlights	
2 to 16 poles	
Horizontal pin strip	
Spacing 7.62 mm	
Closed ends	
Max. 400 V	
Wire Sizes	
Solid min	-
Solid max	-
Stranded (flexible) min	-
Stranded (flexible) max	-
Stranded with ferrule min	-
Stranded with ferrule max	-
Dimensions	
PCB hole diameter	1.4 mm
Materials	
Contact pin	Copper Alloy
Insulating Material	
Material	PA 6.6
Flammability class	UL 94 V-0
Temperatures	
Operating temperature	-40 °C (without mech. load) - 105 °C
Store temperature	-40 °C - 105 °C
Wave Soldering Process	
Soldering temperature, recommended	260 °C
Peak soldering time, recommended	3-4 s
Reflow Process	
Soldering temperature, recommended	-
Peak soldering time, recommended	-

Spacing 7.62 mm

Colours

GREEN, RAL 6018

LIGHT GREEN, similar RAL 6018

BASALT GREY, RAL 7012

Colours according to RAL, there may be variations on colour due to production conditions.
Special colours on request.

Ratings

		c UL us		VDE
UseGroup	B	C	D	
Rated voltage	300 V	150 V	300 V	400 V
Rated current	15 A	15 A	10 A	12 A
Overvoltage category				III
Test voltage	1.60 kV	1.30 kV	1.60 kV	4.0 kV
Pollution degree				3

Counterparts (Spacing 7.62 mm)

Terminal Block

AKZ960	AKZ4961

In combination of connectors with different admission data, the lower value is valid.

Accessoires

Figure	Designation	Article Number
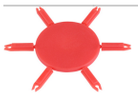	Coding Star CS2-5.0/5.08-RED	Art.-Nr. 50000000024
	Separating Element SE-STL950-GREEN	Art.-Nr. 50950000002

PTR HARTMANN
A Phoenix Mecano Company

Spacing 7.62 mm

Order Data (Spacing 7.62 mm)

Number of Poles	Width (mm)	Article Designation	Article Number	PU
2	15.24	STLZ960/2G-7.62-H-GREEN	50960025021 E	100
3	22.86	STLZ960/3G-7.62-H-GREEN	50960035021 E	100
4	30.48	STLZ960/4G-7.62-H-GREEN	50960045021 E	100
5	38.10	STLZ960/5G-7.62-H-GREEN	50960055021 E	100
6	45.72	STLZ960/6G-7.62-H-GREEN	50960065021 D	50
7	53.34	STLZ960/7G-7.62-H-GREEN	50960075021 D	50
8	60.96	STLZ960/8G-7.62-H-GREEN	50960085021 D	50
9	68.58	STLZ960/9G-7.62-H-GREEN	50960095021 D	50
10	76.20	STLZ960/10G-7.62-H-GREEN	50960105021 D	50
11	83.82	STLZ960/11G-7.62-H-GREEN	50960115021 D	50
12	91.44	STLZ960/12G-7.62-H-GREEN	50960125021 D	50
13	99.06	STLZ960/13G-7.62-H-GREEN	50960135021 D	50
14	106.68	STLZ960/14G-7.62-H-GREEN	50960145021 D	50
15	114.30	STLZ960/15G-7.62-H-GREEN	50960155021 D	50
16	121.92	STLZ960/16G-7.62-H-GREEN	50960165021 D	50
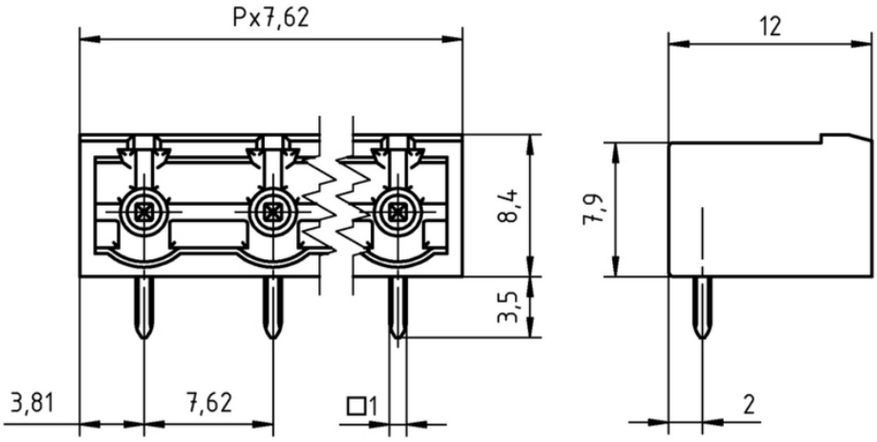
Technical drawing