| PRIMARY CHARACTERISTICS | |
|---|---|
| $V_Z$ | 100V~330V |
| $I_{ZT}$ | 5.0mA |
| $V_F$ | 1.2V |
| $T_{J,Max}$ | 150℃ |

## SMA-LS PACKAGE

Marking : See Table

Pin1 cathode
Pin2 anode

## FEATURES

- Batch process design, excellent power dissipation offersbetter reverse leakage current and thermal resistance
- Glass passivated chip junction
- Standard zener voltage tolerance ±5%.
- Low inductance
- Low profile package
- Built-in strain relief
- Moisture Sensitivity Level 1

## MECHANICAL DATA

- Case：Molded plastic,SMA-LS
- Polarity：Shown above
- Terminals :Plated terminals, solderable per MIL-STD-750,Method 2026
- Epoxy : UL94-V0 rated flame retardant

**Maximum ratings** (at $T_A$=25°C unless otherwise noted)

| PARAMETER | CONDITIONS | Symbol | MIN. | TYP. | MAX. | UNIT |
|---|---|---|---|---|---|---|
| Forward voltage | $I_F$ = 200 mA | $V_F$ | | | 1.20 | V |
| Power Dissipation | $T_L$ = 75°C | $P_D$ | | | 1000 | mW |
| Operating junction temperature range | | $T_J$ | -55 | | +150 | °C |
| Storage temperature range | | $T_{STG}$ | -65 | | +175 | °C |

active

Electrical characteristics (at T =25oC unless otherwise noted)

| Part No. | Marking code | Zener voltage | | | Test curren t | Zener impedance | | | Leakage current | |
|---|---|---|---|---|---|---|---|---|---|---|
| | | Min. V | Nom. V | Max. V | I | Z @ I | Z @ I | IZK | IR | V |
| | | Volts | Volts | Volts | mA | (Ω)Max | (Ω)Max | mA | (uA)M | Volts |
| ZS100BL | Z100 | 95 | 100 | 105 | 5.0 | 750 | 5000 | 0.25 | 0.5 | 75 |
| ZS105BL | Z105 | 99.75 | 105 | 110.25 | 5.0 | 750 | 5000 | 0.25 | 0.5 | 77 |
| ZS110BL | Z110 | 104.5 | 110 | 115.5 | 5.0 | 750 | 5000 | 0.25 | 0.5 | 80 |
| ZS115BL | Z115 | 109.25 | 115 | 120.75 | 5.0 | 750 | 5000 | 0.25 | 0.5 | 85 |
| ZS120BL | Z120 | 114 | 120 | 126 | 5.0 | 850 | 5000 | 0.25 | 0.5 | 90 |
| ZS130BL | Z130 | 123.5 | 130 | 136.5 | 5.0 | 1000 | 5000 | 0.25 | 0.5 | 95 |
| ZS140BL | Z140 | 133 | 140 | 147 | 5.0 | 1200 | 5000 | 0.25 | 0.5 | 105 |
| ZS150BL | Z150 | 142.5 | 150 | 157.5 | 5.0 | 1300 | 5000 | 0.25 | 0.5 | 110 |
| ZS160BL | Z160 | 152 | 160 | 168 | 5.0 | 1500 | 5000 | 0.25 | 0.5 | 120 |
| ZS170BL | Z170 | 161.5 | 170 | 178.5 | 5.0 | 2200 | 5000 | 0.25 | 0.5 | 130 |
| ZS180BL | Z180 | 171 | 180 | 189 | 5.0 | 2200 | 5000 | 0.25 | 0.5 | 140 |
| ZS190BL | Z190 | 180.5 | 190 | 199.5 | 5.0 | 2500 | 5000 | 0.25 | 0.5 | 150 |
| ZS200BL | Z200 | 190 | 200 | 210 | 5.0 | 2500 | 8000 | 0.25 | 0.5 | 165 |
| ZS210BL | Z210 | 199.5 | 210 | 220.5 | 5.0 | 5000 | 9000 | 0.25 | 0.5 | 165 |
| ZS220BL | Z220 | 209 | 220 | 231 | 5.0 | 5000 | 9000 | 0.25 | 0.5 | 170 |
| ZS230BL | Z230 | 218.5 | 230 | 241.5 | 5.0 | 5000 | 9000 | 0.25 | 0.5 | 175 |
| ZS240BL | Z240 | 228 | 240 | 252 | 5.0 | 5000 | 9000 | 0.25 | 0.5 | 180 |
| ZS250BL | Z250 | 237.5 | 250 | 262.5 | 5.0 | 5000 | 9000 | 0.25 | 0.5 | 190 |
| ZS260BL | Z260 | 247 | 260 | 273 | 5.0 | 5000 | 9000 | 0.25 | 0.5 | 195 |
| ZS270BL | Z270 | 256.5 | 270 | 283.5 | 5.0 | 5000 | 9000 | 0.25 | 0.5 | 200 |
| ZS280BL | Z280 | 266 | 280 | 294 | 5.0 | 5000 | 9000 | 0.25 | 0.5 | 210 |
| ZS290BL | Z290 | 275.5 | 290 | 304.5 | 5.0 | 5000 | 9000 | 0.25 | 0.5 | 215 |
| ZS300BL | Z300 | 285 | 300 | 315 | 5.0 | 5000 | 9000 | 0.25 | 0.5 | 220 |
| ZS310BL | Z310 | 294.5 | 310 | 325.5 | 5.0 | 5000 | 9000 | 0.25 | 0.5 | 225 |
| ZS320BL | Z320 | 304 | 320 | 336 | 5.0 | 5000 | 9000 | 0.25 | 0.5 | 233 |
| ZS330BL | Z330 | 313.5 | 330 | 346.5 | 5.0 | 5000 | 9000 | 0.25 | 0.5 | 240 |

FIG.1-TOTAL POWER DISSIPATION VS. LEAD TEMPERATURE

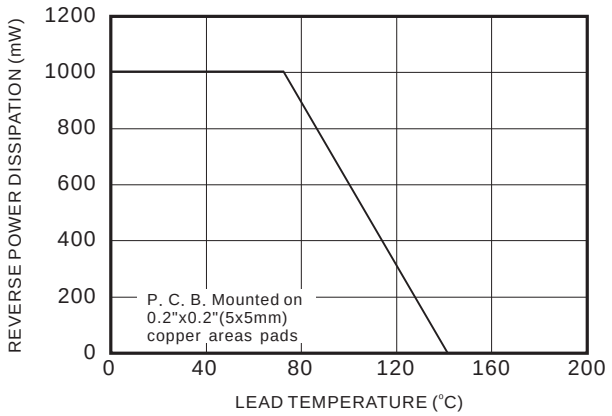


FIG.2-TYPICAL FORWARD CHARACTERISTICS

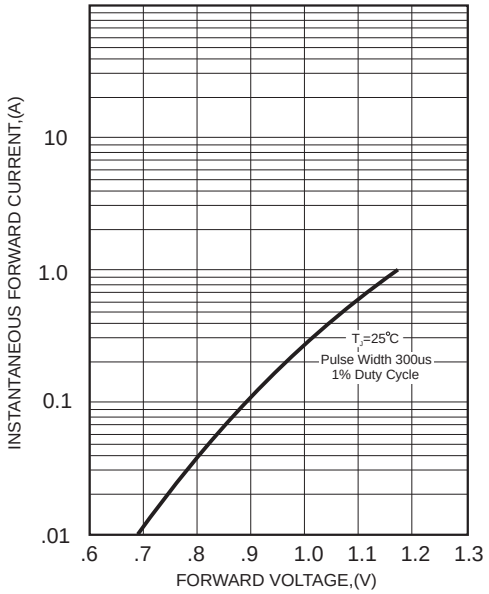


FIG.3 - TYPICAL REVERSE CHARACTERISTICS

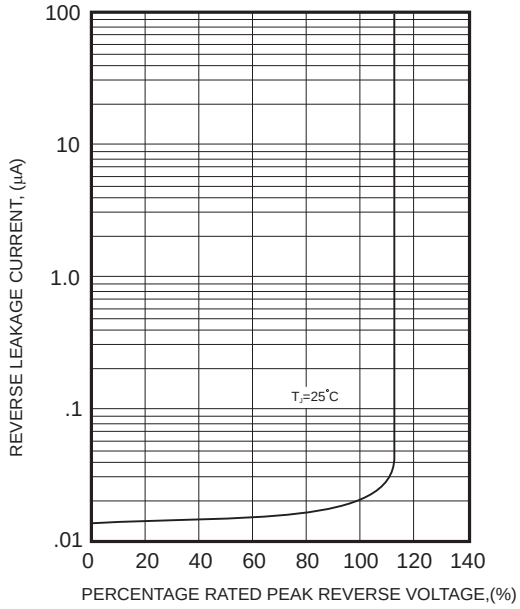


FIG.4 - TYPICAL TEMPERATURE COEFFICIENTS

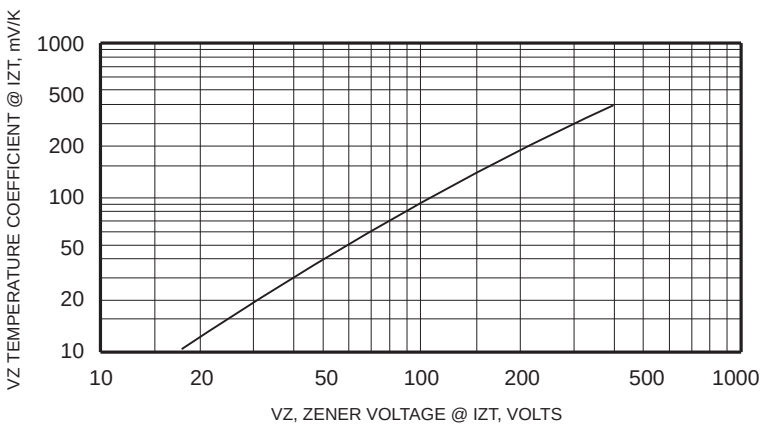

# Outline Drawing

# SMA-LS

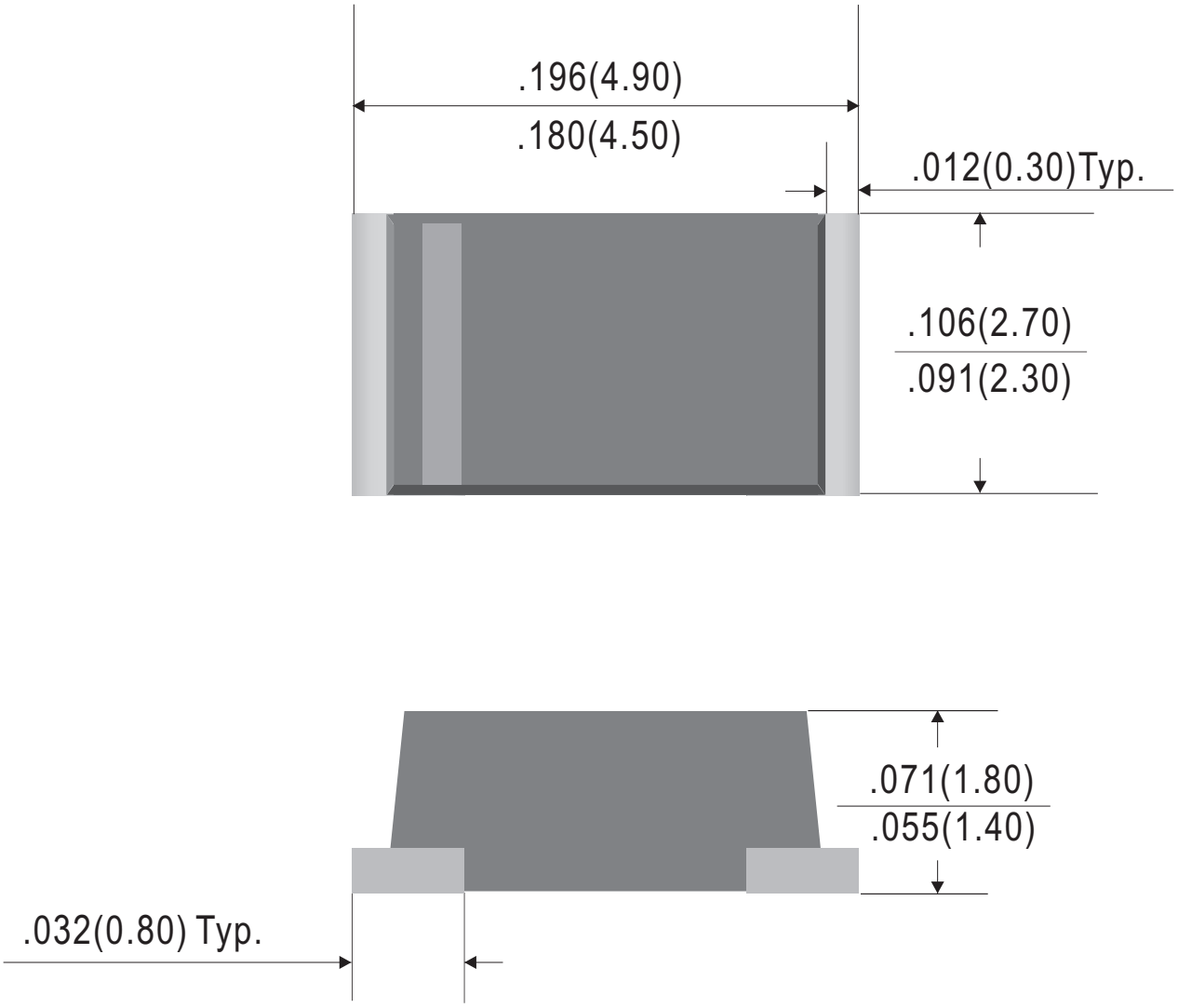


Dimensions in inches and (millimeters)

Rev.E

## Packing information

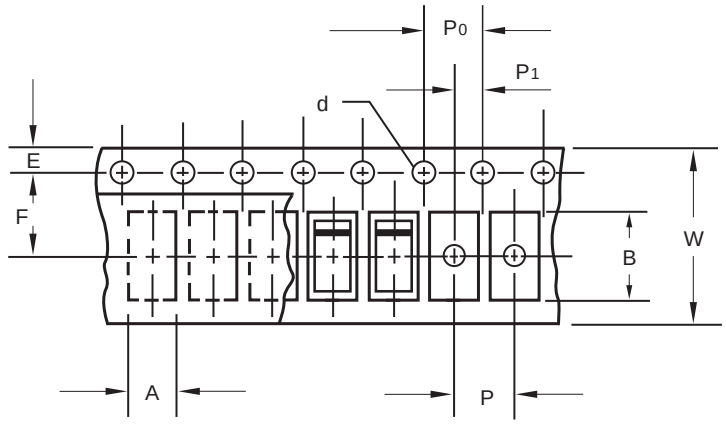


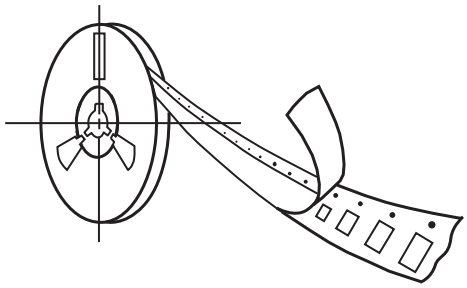

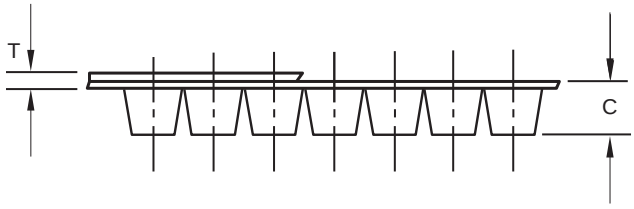


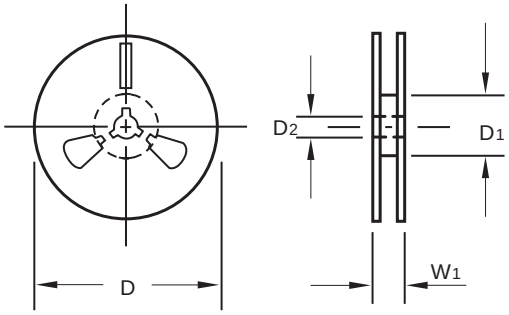


unit:mm

| Item | Symbol | Tolerance | SMA |
|---|---|---|---|
| Carrier width | A | 0.1 | 2.80 |
| Carrier length | B | 0.1 | 5.00 |
| Carrier depth | C | 0.1 | 1.90 |
| Sprocket hole | d | 0.1 | 1.50 |
| 13" Reel outside diameter | D | 2.0 | 330.00 |
| 13" Reel inner diameter | $D_1$ | min | 50.00 |
| 7" Reel outside diameter | D | 2.0 | 178.00 |
| 7" Reel inner diameter | $D_1$ | min | 62.00 |
| Feed hole diameter | $D_2$ | 0.5 | 13.00 |
| Sprocket hole position | E | 0.1 | 1.75 |
| Punch hole position | F | 0.1 | 5.50 |
| Punch hole pitch | P | 0.1 | 4.00 |
| Sprocket hole pitch | $P_0$ | 0.1 | 4.00 |
| Embossment center | $P_1$ | 0.1 | 2.00 |
| Overall tape thickness | T | 0.1 | 0.23 |
| Tape width | W | 0.3 | 12.00 |
| Reel width | $W_1$ | 1.0 | 18.00 |

Note:Devices are packed in accor dance with EIA standar RS-481-A and specifications listed above.

## Ordering Information:

| Device PN | Packing |
|---|---|
| Part Number -T(1)H(2)-WS | Tape&Reel: 2 Kpcs/Reel |

Note: (1) Packing code, Tape & Reel Packing

(2) Halogen free product for packing code suffix "H"

*****Disclaimer*****

WILLAS reserves the right to make changes without notice to any product specification herein, to make corrections, modifications, enhancements or other changes. WILLAS or anyone on its behalf assumes no responsibility or liability for any errors or inaccuracies. Data sheet specifications and its information contained are intended to provide a product description only. "Typical" parameters which may be included on WILLAS data sheets and/ or specifications can and do vary in different applications and actual performance may vary over time. WILLAS does not assume any liability arising out of the application or use of any product or circuit.

This is the preliminary specification. WILLAS products are not designed, intended or authorized for use in medical, life-saving implant or other applications intended for life-sustaining or other related applications where a failure or malfunction of component or circuitry may directly or indirectly cause injury or threaten a life without expressed written approval of WILLAS. Customers using or selling WILLAS components for use in such applications do so at their own risk and shall agree to fully indemnify WILLAS Inc and its subsidiaries harmless against all claims, damages and expenditures.